PARADOR

# Laminate flooring guide

**Table of contents**

02 Table of contents
03 Useful information
05 Product structure
06 Accessories
09 Basic rules for installation
15 Installation options
16 Assembly
19 Installation of Parador Trendtime 3 laminate flooring (herringbone) with the Allround-Click system
23 Tips
24 Retaining value, cleaning and care
26 Frequently asked questions

**Appendix**

27 Checklist for installation on hot water underfloor heating
28 Heating protocol for hot water underfloor heating systems

You will find important information about installation on the pack leaflets or product packaging. For special applications, additional information is also available through Parador Application Technology. Please also pay attention to the technical data sheets, declarations of performance, certificates and installation videos, which you will find on the Parador website www.parador.de/en.

The following standards are also relevant for the use of Parador laminate flooring:

| | |
|---|---|
| DIN 18202 | Tolerances in building construction |
| DIN 18299 | General conditions for construction work of any kind |
| DIN 18365 | Flooring work |
| BEB publication | Evaluation and preparation of substrates; heated and unheated floor constructions |

# Useful information

Laminate flooring is durable, promotes healthy living and is extremely easy to care for – ideal for use in a variety of residential areas. The wide selection of decors, formats and surface textures allows a very individual room design with contemporary looks and an authentic feel for a comfortable and pleasant atmosphere. The Basic, Classic, Trendtime and Selected product lines offer a wide range of decors for every requirement, turning individual living dreams into reality. With the intelligent click system, you can quickly and effortlessly benefit from a true allrounder "Made in Germany".

**Wear classes / exposure classes**

Features, requirements and test methods are specified within the European standard for laminate flooring and are clearly and transparently illustrated across wear classes. Depending on the results obtained – according to the requirements and the intensity of exposure / use – the floor covering is assigned to the classes of residential (number range 20) and commercial / public (number range 30) use.

| Wear class | Pictogram | Intensity of exposure | Application (e. g.) |
|---|---|---|---|
| **Wear classes in the residential area** | | | |
| 21 | | moderate use | Bedroom, storage room |
| 22 | | normal use | Living room, dining room |
| 23 | | heavy use | Kitchen, hallway |
| **Wear classes in the commercial area** | | | |
| 31 | | moderate use | Hotel rooms, small offices |
| 32 | | normal use | Offices, hotel lounges |
| 33 | | heavy use | Classrooms, open-plan offices, boutiques |

Additional features are listed in the technical data sheets. You can download them at www.parador.de/en. You will also find an overview of the basic properties of the different Parador collections in the current product catalogues.

# Useful information

**Flooring and room climate**

The main component of laminate flooring is its HDF core board, which is a so-called hygroscopic material. That means that the material can absorb moisture and release it again.

On the one hand, this can have a regulating effect on the room's climate, but it can also lead to the disadvantage that the material swells (gets bigger) when it absorbs moisture or shrinks (gets smaller) when it emits moisture. Whether it swells or shrinks depends directly on the indoor climate.

If the climate is too dry, then hygroscopic material shrinks (gets smaller); (here: HDF core board); if the indoor climate is too damp, then it swells (gets bigger).

Particularly in the winter months, when the room humidity is often much too low (see illustration), the natural shrinkage of the material can lead to gaps forming. Conversely, when it is too damp, if the wall clearance is not adequate or expansion joints are missing, the floor area may start to bulge upwards.

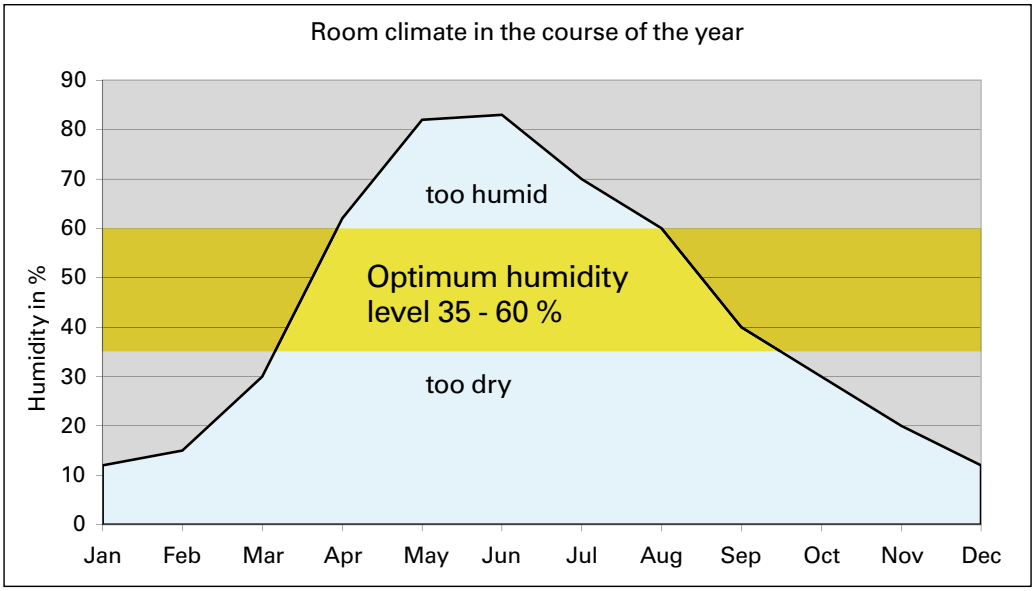


Please make sure not to exceed or fall below the ideal humidity figure shown in the diagram for a long time over the course of the year.

# Product structure

① Overlay
The highly abrasion-resistant, water-impermeable top layer made of melamine resin protects against normal everyday stresses, microscratches, and falling objects. The high corundum content is responsible for this, as its hardness is only exceeded by diamond.

② Decor paper
The elaborately reproduced decors are fascinating with amazingly genuine reproductions of many natural materials. The decor print made with solvent-free inks impresses with extraordinary brilliance. The impregnation using melamine resin also protects against moisture.

③ HDF core board
The highly compressed, swell-resistant core board provides high dimensional stability and thus minimises the influences caused by climate fluctuations or unusual loads. In addition, the all-round edge impregnation ensures excellent edge swell protection.

④ Balancing layer paper
The reverse side of the laminate flooring is formed by the balancing layer paper, which compensates against tension and prevents the plank from warping. At the same time, the impregnated balancing layer paper protects the core board against moisture from beneath.

⑤ Safe-Lock® PRO
The improved patented Safe-Lock® PRO click mechanism is milled directly into the special core board and is characterised by multiple benefits:

› high fitting accuracy for invisible plank transitions and totally even surfaces,
› extremely high connection stability for permanent fitting accuracy,
› precisely, safely and quickly installed,
› effortless handling

⑤ Allround-Click system (only applies to Trendtime 3)
The patented Allround-Click click geometry allows the installation of herring-bone patterns without right and left strips and simplifies application in particular through easy installation.

# Accessories

**Underlays**

Comprehensive information about underlays can be found in our catalogues and online at www.parador.de/en.

When installing laminate flooring, we recommend using an underlay, as this compensates for slight bumps in the subfloor and has a positive effect on the flooring's acoustics.

**Akustik-Protect 50**
› integrated vapour barrier

Akustik-Protect 50

**Akustik-Protect 80**
› without integrated moisture protection, e.g. for installation on wooden substrates
› very good footfall sound and ambient noise insulation*

Akustik-Protect 80

**Akustik-Protect 100**
› integrated vapour barrier
› very good footfall sound and ambient noise insulation*
› no additional moisture protection required (PE film)

Akustik-Protect 100

**Akustik-Protect 500**
› integrated vapour barrier
› even better characteristics than Akustik-Protect 50, 80 and 100
› no additional moisture protection required (PE film)

Akustik-Protect 500

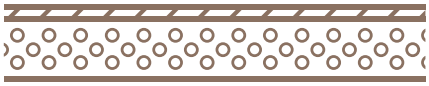

**Aluminium adhesive tape**
› for sealing the butt joints between the underlay strips for improved moisture protection

**PE film**
When installing on mineral substrates without the use of underlays with moisture protection, additional moisture protection (PE film) is absolutely necessary.

PE film

* Impact noise is focused downwards, i.e. it is noticed in lower floors. Ambient noise is focused upwards and is noticed in the room in which it is created.

# Accessories

### Skirting boards

For a perfect finish, the Parador assortment includes the right decorative skirting board to match every floor design. It is attached to the wall with the Parador assembly adhesive or the special plastic clips with integrated cable conduit. Caps and corners round off the assortment.

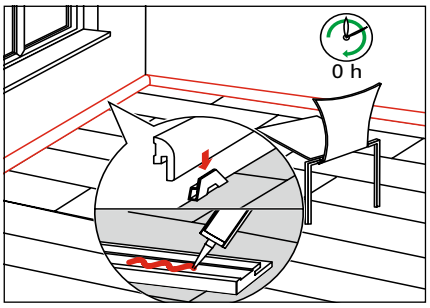


### Skirting board assembly instructions

The floor covering is ready to walk on immediately after floating installation. Remove the plastic spacer wedges and attach the Parador skirting board using the patented clip technology or Parador assembly adhesive. For installation in wet rooms, e.g. bathrooms, we recommend using the waterproof Parador skirting SL 5 WF.

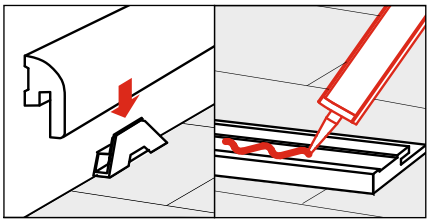

Assembly video - Fitting Parador skirtings

Note:
Click on the text "Assembly video", on the QR code or scan the QR code

### Flooring profiles

Parador profiles are suited for finishing, transitions and adjustments. The basic profiles are screwed onto the subfloor or – in particular with an underfloor heating system – are glued to the subfloor. Insert cover profiles or screw down aluminium profiles – done.

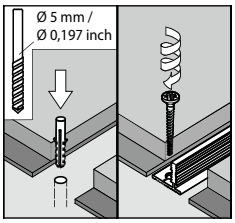


### 3-in-1-HDF profile laminate flooring

› identical texture and decor
› 48 mm wide
› installation height approx. 3.5 mm
› area of use for flooring: thickness 7 to 9 mm
› For heights from 9 to 11 mm (including underlay)

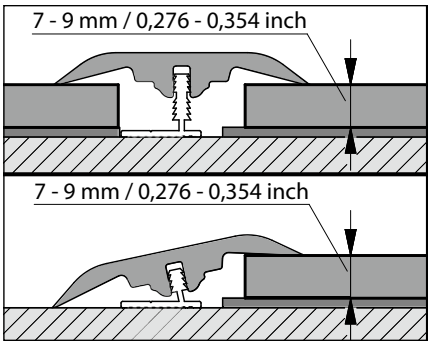


Installation video – Fitting Parador 3-in-1 HDF profile

Note:
Click on the text "Installation video", on the QR code or scan the QR code

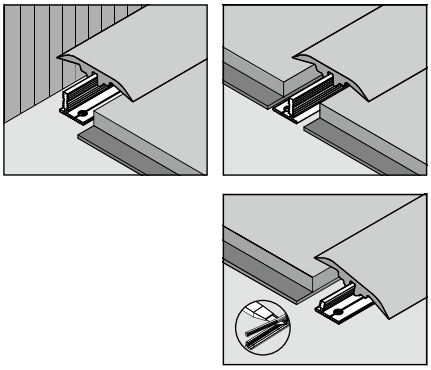

**Note:** When used as an adapting profile, only the base profile needs to be adjusted. In certain cases, when used as an end profile, depending on exposure, underpinning may be advisable (e.g. with a narrow strip of laminate flooring).

# Accessories

**Aluminium profiles**

The aluminium profiles are suitable for use with floor coverings with a thickness of 4 to 15 mm.

Please note the following cover dimensions:

| | |
|---|---|
| Transition profile: | 34 mm |
| End profile: | 22 mm |
| Adapting profile | 44 mm |

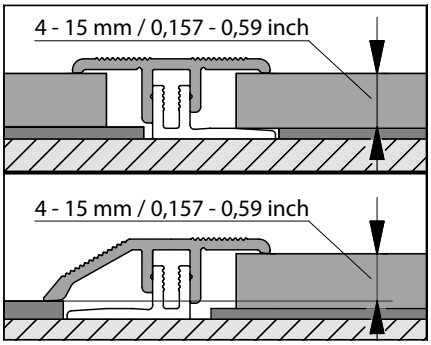


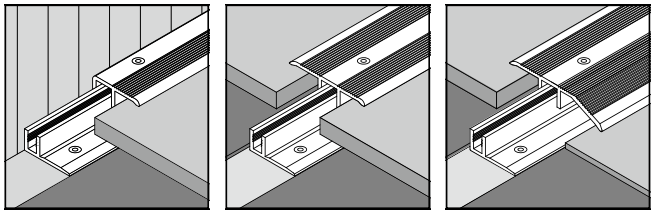

**Tool**

You will need the following tools and aids for installing Parador laminate flooring:

Tape measure or folding ruler, cutter knife, pencil, handsaw, Parador plastic spacer wedges, Parador MultiTool, hammer, drill and jigsaw, crosscut saw or circular saw.

Other tools and materials may be required, depending on the application: “Gun” for assembly adhesive, metal saw for aluminium profiles; Parador glue D3.

# Basic rules for installation

These installation rules and the assembly process shown below are generally applicable. Other special or different rules and instructions, which are advisable and mandatory, may be shown on the pack leaflets inserted with the relevant products.

Installation video – Correct installation of Parador laminate flooring:

Note:
Click on the text "Installation video", on the QR code or scan the QR code

**Inspect planks for material defects**

Before and during installation, the laminate planks should be checked thoroughly for material defects. Planks with visible defects or damage must not be installed. Assembly should only take place under daylight or with adequate lighting, as otherwise any damage or faulty planks cannot be detected in some circumstances.

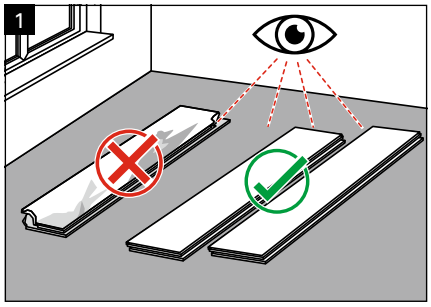


**Acclimatisation before installation**

The laminate flooring elements must be acclimatised over a period of at least 48 hours at a room temperature of 17-24 °C and a relative humidity of 35-60% in the room where they are being installed. That means that the sealed packages must adjust to the climate conditions in the room. If there are major climate differences between the storage area and the room of installation, the acclimatisation period should be longer preferably. If the climate conditions are almost the same, the period can also be shorter.

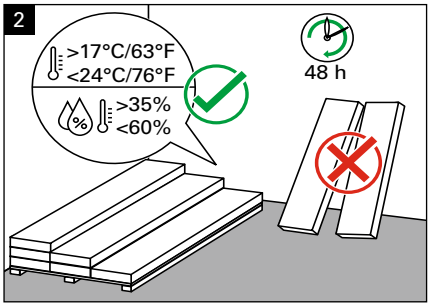


Please store the packages on an even base without opening them. It is essential that you comply with these points, especially in new builds where the humidity is usually very high.

# Basic rules for installation

**Maintaining expansion joints / wall clearance**

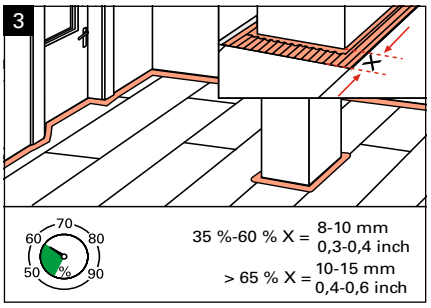


The core board on the laminate flooring is a wood-based material, which, like natural wood, is also subject to swelling or shrinking depending on climate conditions.

The installed laminate flooring therefore needs to be kept a suitable distance away from all heavy objects (e.g. kitchens) and fixed components, in other words walls, supports, radiator pipes etc., which is known as the wall clearance or expansion joint. Furthermore, expansion joints must be maintained if a defined installation area is exceeded.

Insufficient wall clearance is the most common installation error. This often only becomes noticeable in summer, as the increased humidity and temperature in the summer months makes the laminate flooring expand.

The expansion joint or wall clearance should be at least 8-9 mm*, more on larger areas.
The rule of thumb is: per metre of flooring keep at least a 1.5 mm expansion joint at both sides of the room. (Example: room width 5 m = min. 8 mm wall clearance on each side) (Figure 3).
Plank thickness = wall clearance (example: laminate flooring is 8 mm thick = min. 8 mm wall clearance / laminate flooring is 9 mm thick = min. 9 mm wall clearance on each side).

Even if the installed material only abuts a single point in the room, the floating material may start to push up and warp. "Popular" weak points in this case are door frames, joints to stairs, radiators and end rails.

***Note:** at least 15 mm at a relative humidity of > 65 %.

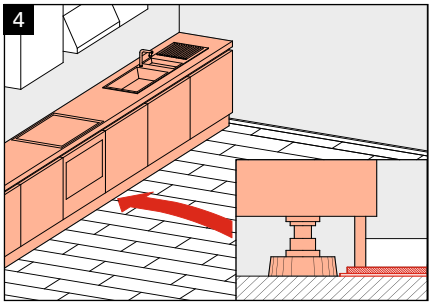


Heavy objects (over 350 kg), such as kitchen units and cupboards (the flooring can move on one side only), require twice the wall clearance on the opposite side. We recommend setting up heavy objects or fitted furniture, kitchens, fitted units, aquariums, etc. before installation and only installing the flooring just underneath the plinth (Figure 4). This makes it easy to take the flooring back up at any time. The expansion joints are covered by skirting boards at the walls and in other areas by special flooring profiles. It may be reasonable to include the position of heavy objects at the installation planning (tip: avoid open joints by gluing the ends in the stress areas).

# Basic rules for installation

**Layout of expansion joints**

As the laminate flooring will swell or shrink as just described depending on climate conditions, further expansion and movement joints of at least 8 mm are necessary under the following circumstances:
› larger areas (over 8 x 12 m) - (Figure 5)
› irregular shaped areas

The movement joints are covered with appropriate transition profiles (see section: Accessories).

**Note:** The installer is always liable if expansion or movement joints are omitted.

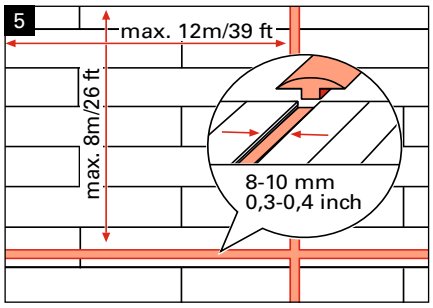


**Installation pattern**

Laminate flooring elements can either be laid in a regular or random fashion (Figure 6). In any case, make sure that the head joints from row to row are offset by at least 40 cm, for tile format half the length, for products with a plank length of more than 150 cm, a plank offset of min. 60 cm must be observed.

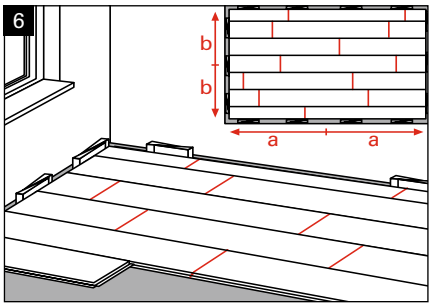


**Installation direction (incidence of light and room floor plan)**

For optical reasons, the planks should be laid parallel to the incidence of light (away from the incidence of light), i.e. the long side runs in the same direction as the light entering the room (Figure 9). If there is more than one window, please go by the largest window. If the floor plan of the rooms is very unusual, the direction of installation should also be judged according to how the room is divided. For optical reasons, the long sides of the floor should be at right angles to the long side of the room. This makes the room appear squarer and bigger instead of long and "tube-like".

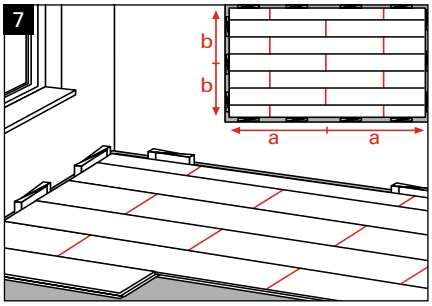


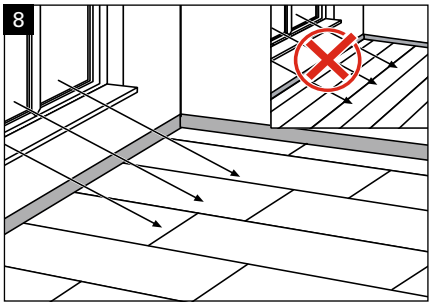

# Basic rules for installation

**Installation in wet rooms**

Ordinary laminate flooring must not be installed in areas where water can splash on the floor. Standing water penetrates the HDF core board via the edges and causes permanent damage. Laminate flooring from the Basic, Classic and Trendtime collections can be used in wet rooms and where there is standing water. Laminate flooring from the Basic collection up to 24 hours (Figure 9a), Classic and Trendtime up to 48 hours (Figure 9b), (Trendtime 3 up to 1 hour (Figure 9c)). The Selected collection can be used in wet rooms with up to 72 hours of protection in standing water (Figure 9d). Laminate flooring should not be installed in permanently wet rooms or damp environments (sauna areas, showers, etc.) as the risk of moisture penetrating cannot be ruled out.

If the laminate flooring is to be installed in bathrooms, it must be ensured that the humidity is continuously in the normal range between 35% and 60% relative humidity.

For installation in permanently wet rooms and environments, we recommend using the waterproof Parador skirting SL 5 WF.

**Note:** The installation of laminate flooring in showers is not permitted (temperature effects). The formation of puddles and the effects of damp must be prevented at all costs at the edges and in the joint areas, including expansion joints (Figure 10). Also seal these areas carefully (Figure 11). Water penetrating underneath the flooring may cause the formation of mould for example.

9a

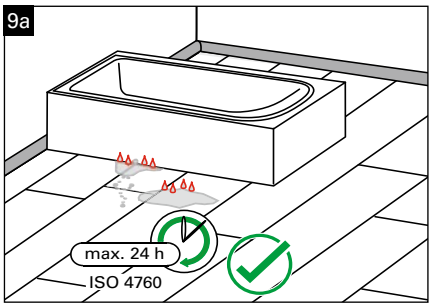


9b

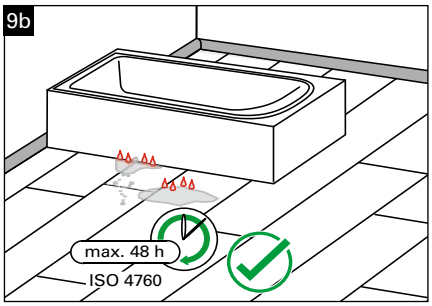


9c

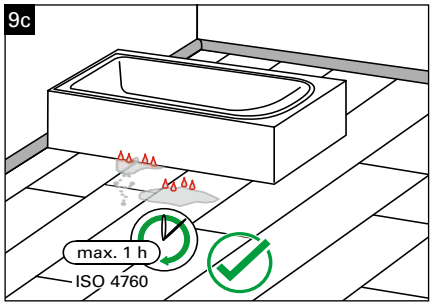


9d

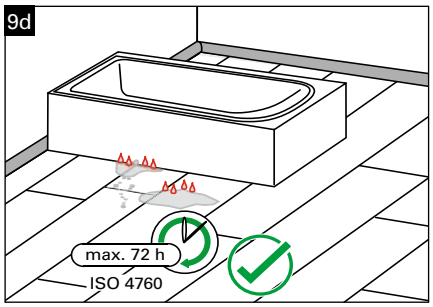


10

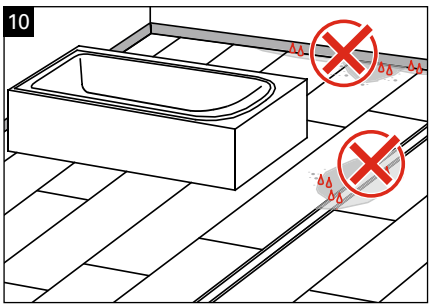

11

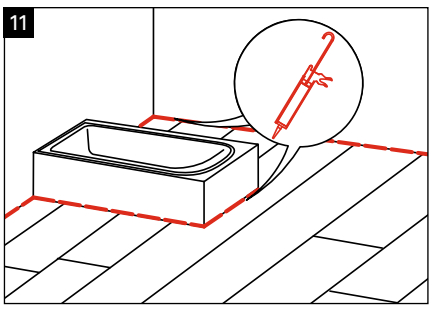

# Basic rules for installation

**Subfloor requirements**

› The basic requirement for the installation of laminate flooring is a firm, clean, dry and even subfloor.

› Uneven areas of more than 3 mm across 1 m should be evened out with a suitable filler (Figure 1).

› When installing on old wooden floorboards and particle boards, loose boards, for example, must be screwed to the substructure to reduce any creaking. The flooring should be laid at right angles to the lengthways direction of the wood planks.

› For reasons of strength and from a hygienic point of view, carpets are not suitable as a subfloor and must be removed (Figure 2).

› We only recommend an installation on older PVC, CV or linoleum coverings if the flooring is glued in place, has no loose areas and there is no underfloor heating. A suitable underlay must be installed to compensate for bumps.

› In case mobile appliances such as office chairs or containers are expected to be moved on the flooring area, the subfloor must be appropriately pressure-resistant. The maximum weight per wheel must not cause the flooring to be deformed, as this will damage the plank locking mechanism and the plank surface. Protective underlays are necessary depending on the type of rollers. Only objects with soft rubber rollers should be used.

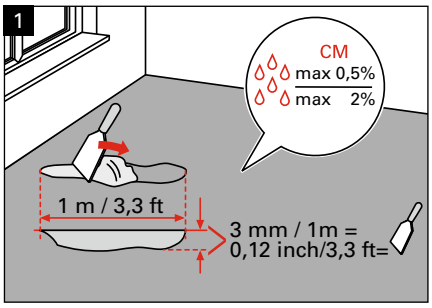


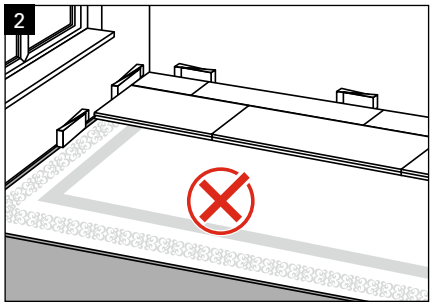

# Basic rules for installation

› Screeds must not exceed the following moisture level:

| | Anhydrite screed | Cement screed |
|---|---|---|
| without underfloor heating | max. 0.5 CM % | max. 2.0 CM % |
| with underfloor heating | max. 0.3 CM % | max. 1.8 CM % |

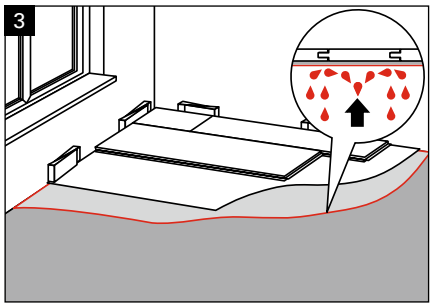


Generally speaking, the screed moisture must be checked using a suitable test measuring device. A test sample must be taken from the bottom third of the screed composition, whereby the thickness of the screed must be measured and documented at each test point. The figures only apply to screeds without additives. For screeds with additives, or quick-drying screeds, the figures specified by the manufacturer should be observed.

With mineral substrates*, as a precautionary measure a 0.2 mm thick PE film must be placed underneath as a vapour barrier (allow the strips to overlap by at least 30 cm, apply adhesive tape, leave a trough-shaped overhang at the edge and cut off the excess with a knife after attaching the skirting board). Or you can use Parador underlays with footfall sound insulation and integrated moisture protection. If moisture keeps on rising from the subfloor, please seal the floor area with a suitable liquid sealer. Under no circumstances use a moisture barrier on wooden installation substrates (Figure 3).

* Mineral substrates include, for example, concrete, screed and stone.

# Installation options

**Floating installation**

If the laminate flooring is installed without a fixed connection to the subfloor, i.e. only the planks are joined to one another, we call this a "floating installation". Parador laminate floors can be installed quickly and easily thanks to the simple click technology and are designed for floating installation. This is the most popular installation method.

**Whole-area gluing**

Based on the principle that the laminate flooring elements are designed for a floating installation, Parador advises against gluing the whole area.

**Installation on underfloor heating**

Parador laminate flooring is suitable for floating installation on hot water underfloor heating systems. Please note the following for installation on electric underfloor heating systems:
› installation only with systems that have temperature sensors and controllers
› no installation on older design electric underfloor heating systems (installed before 2000)
› no installation on night storage heaters

On the technical data sheets you will find further information, for example about the heat transmission resistances of our laminate floors.

When it comes to installation/application, please also bear in mind the "Checklist for installation on hot water underfloor heating" in the appendix.

The maximum surface temperature of 29 °C must not be exceeded and a very fast heating process must be avoided.

**Use of floor cooling**

According to prevalent expert opinions, cooling a room by maximum 5 °C is easily possible at a maximum relative humidity of 65 %. (According to the workplace directive, the lower floor temperature limit of 19 °C should also be maintained in „normal" housing. People are more prone to ill health in areas with cold floors).

The Parador floor coverings can be used without restrictions if these specified conditions are complied with (whilst bearing in mind the main Parador installation and fitting instructions).

When installing on underfloor heating or cooling systems, it is essential to seek approval from the system manufacturer. The specified parameters for installation on such systems must be complied with. Installation on heating systems with a night storage function is out of the question.

**Note:** Please note the influence of any underlay used on the underfloor heating or floor cooling system.

# Assembly

For assembly purposes, please also take note of the instructions on the pack leaflet in particular.

Once you have taken note of the basic rules and the underlay is installed, it is possible to start with the actual installation of the floor covering.

**Preparation and centring**

In order to achieve an even appearance of the first and last row, measure the width of the room at right angles to the direction of installation and work out the width of the first and last row of planks (in each case at least ½ plank width) (Figure 1).

Install elements mixed from several packs so that you get an even decorative appearance across the area.

The last element of each row is shortened or cut to length and the remaining piece, which should not be shorter than 15 cm, is used to start the next row (Figure 2).

The cross joints should be offset from row to row by at least 40 cm (half the plank length with tile format) ("random bond"). For planks longer than 150 cm, an offset of min. 60 cm must be observed. Please bear in mind when gluing the whole area that any expansion joints (so-called construction joints) in the subfloor must also be adopted in the top layer.

Please check each plank in daylight or adequate lighting for defects before installation and only lay planks that are in perfect condition.

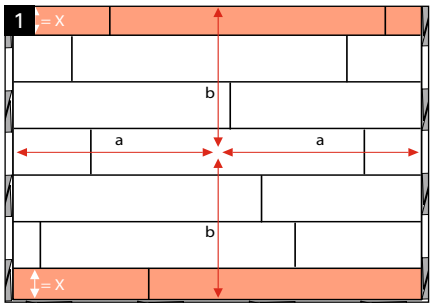


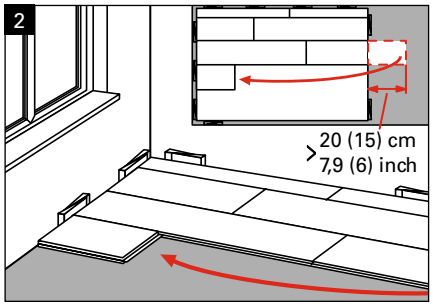

# Assembly

For assembly purposes, please also take note of the instructions on the pack leaflet in particular. Also see the section Basic rules for installation. The Parador installation video Correct installation of Parador laminate flooring (page 9: QR code and internet link) is available in this section.

If the wall is not straight, adopt the contours of the wall e.g. with the Parador MultiTool and trim the first row of planks accordingly (Figure 3).

The first row of planks is laid so that the groove of the end side and the long side (former tongue side) face the wall (Figure 4).

Start in the left-hand corner of the room. The required wall clearance is at least 8 mm and is achieved using the Parador plastic spacer wedges.

Start by pushing together the end joints of the first row of planks. Align the long sides of the planks. Please insert the first plank of each subsequent row diagonally into the long edge of the installed row. An angle of 15-25° is ideal, and the Parador MultiTool helps here (Figure 5).

To install the subsequent planks, please proceed as follows:

› Place tongue on the end side into the groove on the long side

› Place groove on the end side up to the level of the black dot on the tongue on the end side (Figure 6)

› Pull/push plank up to the installed row in one movement (Figure 7)

› Check whether all joints are closed (Figure 8)

› The continuous use of the Parador MultiTool ensures an optimal angle setting

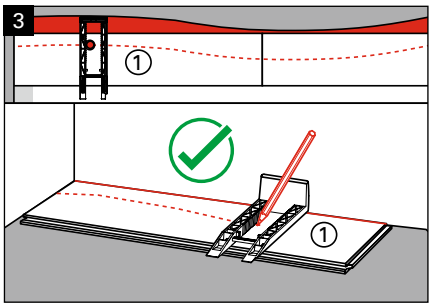


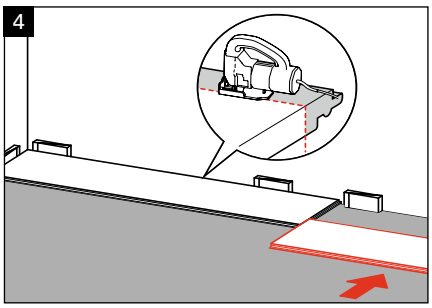


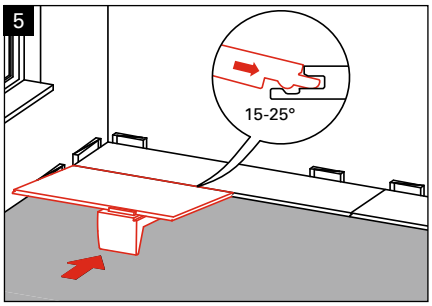


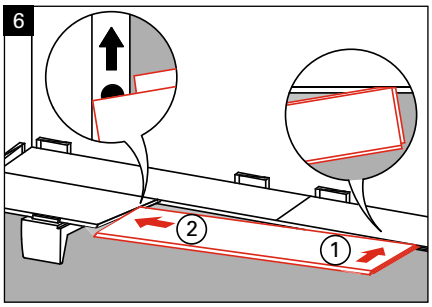


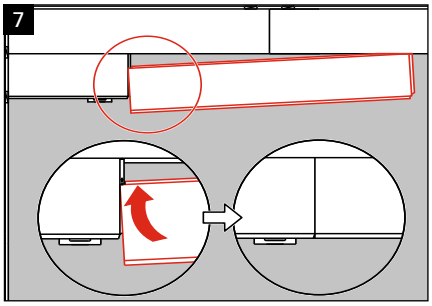


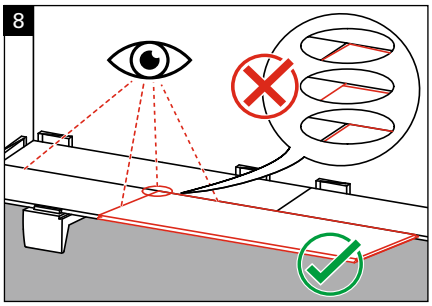

# Assembly

Alternatively, from the second row onwards you can use the following installation technique:

› Push the plank on the floor up to the first row
› Tilt the plank slightly (15 – 25°) up to the click-in point (Figure 9)
› The plank clicks in when lowered, resulting in a tight fit with no play.
› Set in place, i.e. by hitting with a hammering block (Figure 10 and 11)
› After measuring and cutting the piece on the end of the row to length, this is inserted carefully (bear wall clearance in mind) (Figure 12)

If you are using a jigsaw to cut the elements, it is best to guide the saw along the bottom of the plank. If using a bench saw, place the plank on the bench with the decor side facing up.
In this way you will get the best quality cut (Figure 13).

Cut the last row of planks to the required size by using e.g. the Parador MultiTool or a leftover piece of plank to transfer the width (Figure 14). Please also bear in mind the required wall clearance of at least 8 mm in doing so.

If, when fitting the piece on the end of the row, it is no longer possible to place it at the level of the black dot, push this end piece on the tongue of the end edge into the long edge (Figure 14), remove the Parador MultiTool (Figure 15) and lock the long edge in place. Check that all joints are closed and use the Parador MultiTool as a hammering block if necessary (Figure 16). Use a hammering block or the Parador MultiTool to lock the end and long edge for good.

Cut the last row of planks to the required size by using e.g. the Parador MultiTool or a leftover piece of plank to transfer the width. Please also bear in mind the required wall clearance of at least 8 mm in doing so.

The floor is ready to walk on as soon as it has been installed. All you have to do is remove the plastic spacer wedges and attach the Parador skirting board using the clip technology or Parador assembly adhesive.

We recommend that you keep the planks left over after installation so that you have the option of replacing damaged planks in the event of later damage.

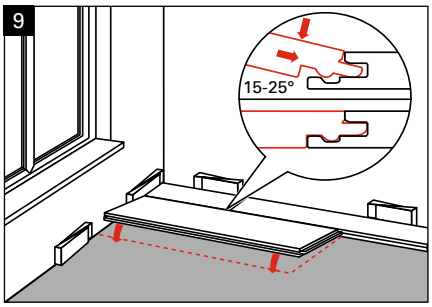


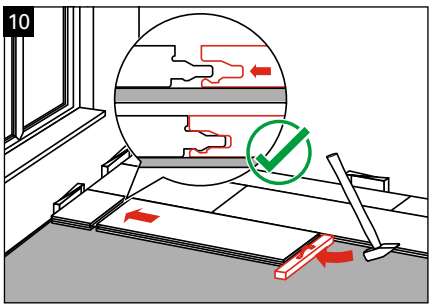


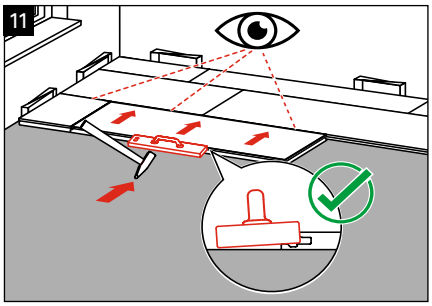


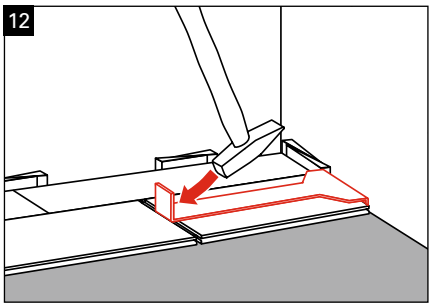


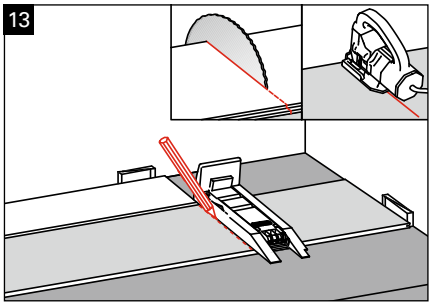


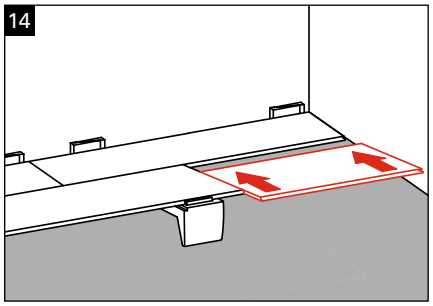


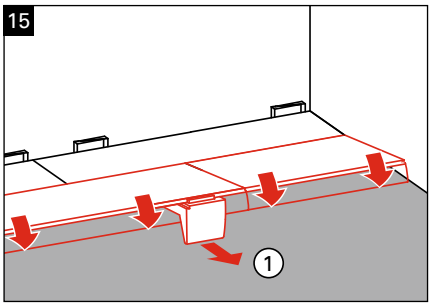


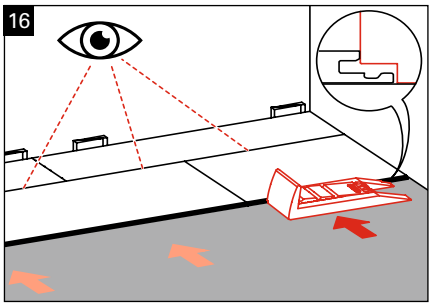

# Assembly

**Dismantling tips**

To take up the planks without damaging them, proceed as follows: the complete row of planks is lifted on the groove side past the click-in point and pulled away in one piece. After that, lay the row of planks back on the floor. The end joints are not undone by pulling longways, but by pushing the planks cross-ways.

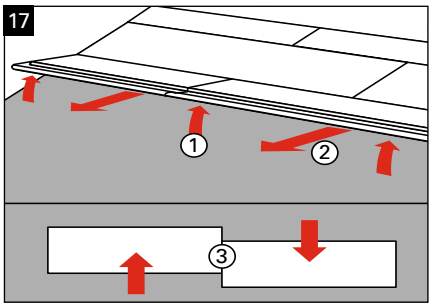


# Assembling Trendtime 3 laminate flooring (herringbone)

**with the Allround-Click system**

These installation rules and the assembly process shown below are generally applicable. Other special or different rules and instructions, which are advisable and mandatory, may be shown on the pack leaflets inserted with the relevant products.

For assembly purposes, please also take note of the instructions on the pack leaflet in particular.

Installation video – Installing Trendtime 3 laminate flooring with Allround-Click

Note:
Click on the text "Installation video", on the QR code or scan the QR code

When selecting the underlay, please ensure that it has sufficient compressive strength. This should not be less than 120 kPA. Soft, less compression-resistant underlays have a negative effect on installation stability. The Parador products Akustik-Protect 80, Akustik-Protect 100 and Akustik-Protect 500 meet this requirement. Once you have taken note of the basic rules and the underlay is installed, it is possible to start with the actual installation of the floor covering.

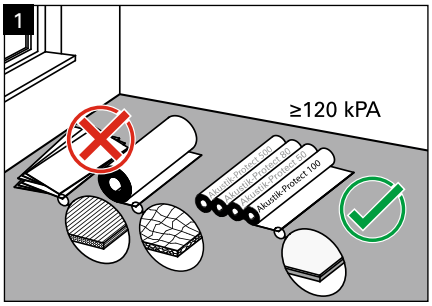

# Assembling Trendtime 3 laminate flooring (herringbone)

**with the Allround-Click system**

## Preparation

When installing laminate flooring planks (herringbone), the appearance of the room depends very much on the installation method. Figure 1 and Figure 2 show some examples of this. Figure 1 shows the 0° direction parallel to the room walls. Figure 2 shows the so-called 45° direction. For the installation of herringbone patterns, all you need are the "universal" planks developed by Parador, in other words no left and right-hand planks. The installations shown above can be made with this plank, the installation direction is not specified. Figure 3 shows the recommended direction of installation. Make sure here that the planks are installed so that the groove side of the planks is in the direction of installation and the tongue is clicked into the groove. Please check each plank for defects before installation and only lay planks that are in perfect condition.

## Assembly

Centre room. a = half room length = centre strip
But: based on the 45° angle, measure 5 cm in addition to half the room length and place the centre strip there (a + 5 cm). This axis must be marked with a piece of string (Figure 4).

Please first install a whole row of three (installation sequence according to numbering) and push this as shown up to the placed spacers (Figure 8).

Make sure that the planks are correctly locked. Listen out for the audible clicking sound. In addition to a vertical tap with a hammering block (Figure 05) to lock the end side into the long side, we recommend an additional horizontal tap every three rows to finally fix the planks in place (Figure 06).

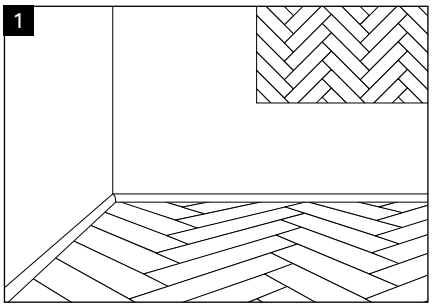


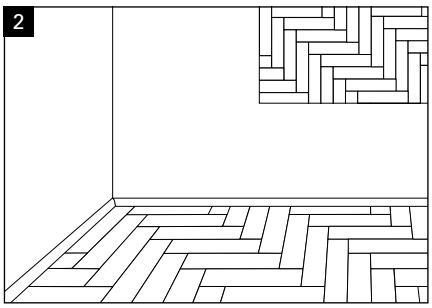


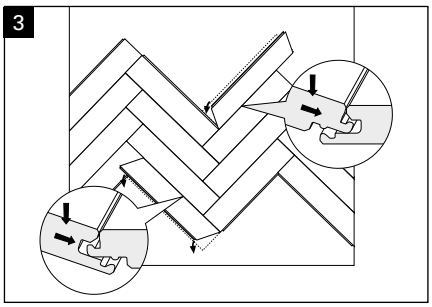


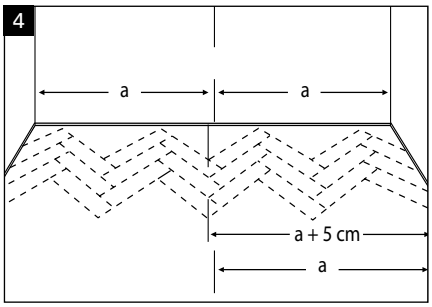


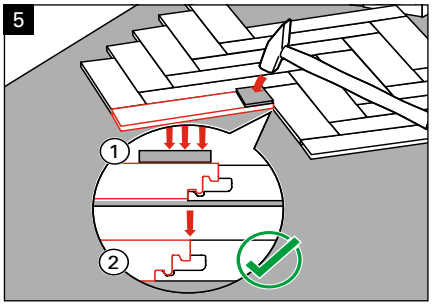


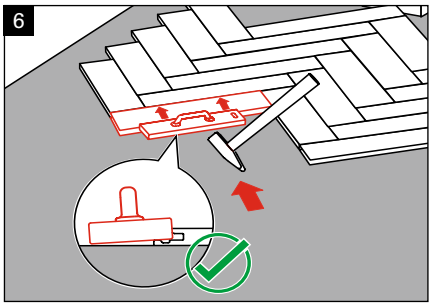

# Assembling Trendtime 3 laminate flooring (herringbone)

**with the Allround-Click system**

**Tip:** To install the first planks easily and at the correct angle to each other, please proceed as follows: first install planks A and 1 together with an offset of approx. 120 mm. Plank A only acts as an anchor point and will be removed later. Then install planks 3 and 4. Now you can remove plank A again and install the remaining planks according to the numbering (Figure 7).

Furthermore, always make sure to place the groove side in the direction of installation and thus click the tongue into the groove.

Please glue together the planks of the first and last full three rows. To do this, please apply Parador D3 glue sparingly to the glue areas of the long and end edges. Avoid excessive amounts to prevent glue from leaking into the V-joint. The planks must be clicked together completely tightly. For this purpose, the planks can be pulled together completely tightly with tape (adhesive tape), for example. For fixing in place, please weigh down the glued areas evenly and across the planks. Make sure that the glue has cured.

Now align this row exactly with the axis string. If the wall does not run straight, the spacers may need to be repositioned. Please bear in mind a gap to the wall of 8-10 mm. This gap required all the way round must also be maintained for fixed installations.

The edge planks must be adjusted. Saw cut under 45° or according to the contours of the wall (Figure 10).

A custom-cut plank must be inserted into the triangular free areas (Figure 11). To make it easier to measure the planks, you will find a template on the back of the box which you can cut out and then place on the plank (Figure 8+9).

Please glue these cut or shortened planks together. To do this, proceed in the same way as for the first and last three full rows:
1. Apply D3 glue sparingly on the long and end edges;
2. Make sure that planks are installed tightly;
3. Weigh down evenly, across the planks.
4. Allow glue to cure

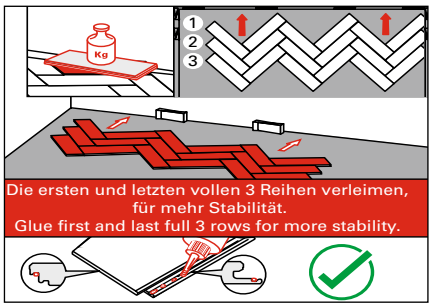


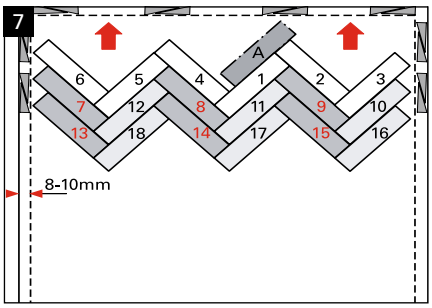


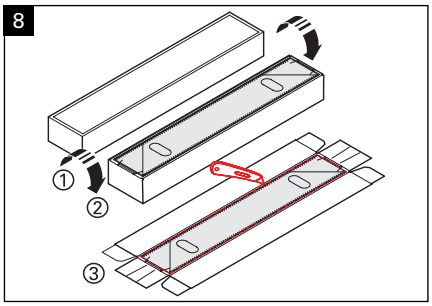


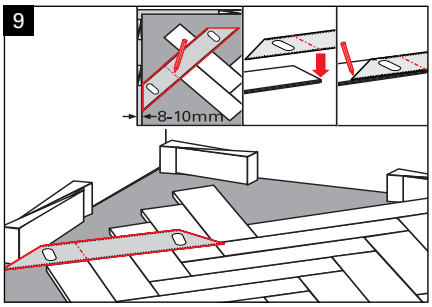


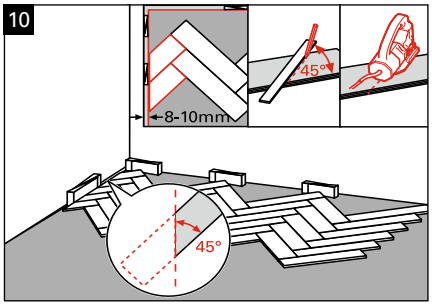


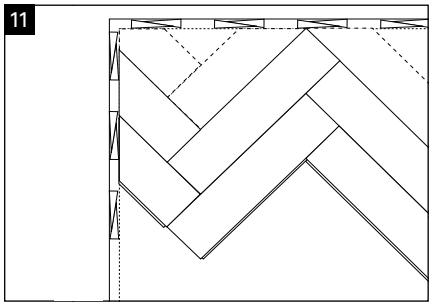


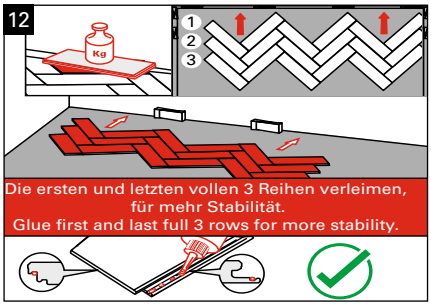

# Assembling Trendtime 3 laminate flooring (herringbone)

**with the Allround-Click system**

If the relative humidity in the room is not between 30% - 65%, please glue all planks together. The same applies if you are installing the flooring on underfloor heating.

Once the glue has dried (approx. 1 hour), the flooring is ready for use. Remove Parador plastic spacer wedges and attach the Parador skirting boards using the patented clip technology or Parador assembly adhesive.

**Note:** In areas where the planks can no longer be swivelled in (door frames, heating pipe, etc.; see also the section: DIY tips), they must be joined and glued horizontally. To do this, the snap-in tongues must be removed with a knife (Figure 14). Gluing is done as described in Figures 12 and 13.

Please keep the planks left over after installation so that you have the option of replacing damaged planks in the event of later damage.

**Dismantling tips**

If it is necessary to dismantle the flooring, the glued areas must be removed first. The planks can then be easily removed (Figure 15).

Alternatively, if you want to glue the flooring over the whole area, please contact us beforehand (Figure 16).

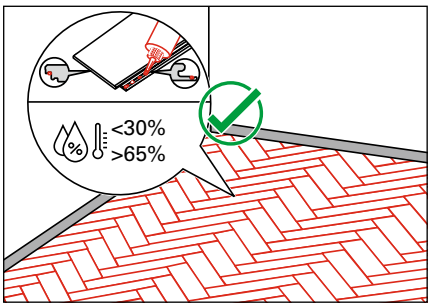


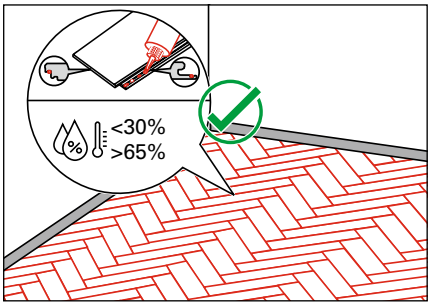


14

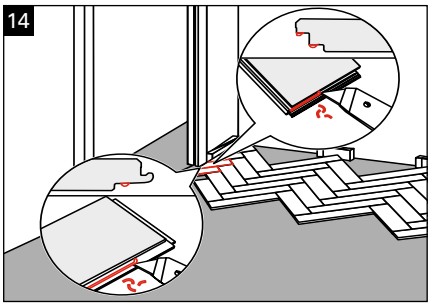

15

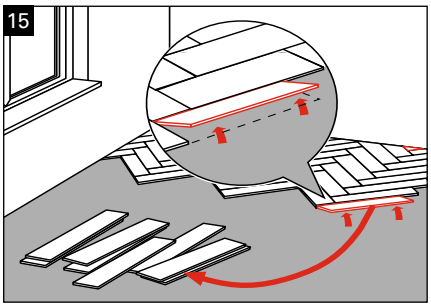

16

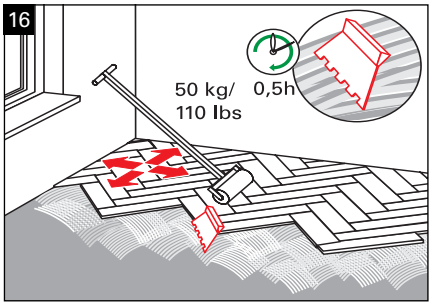

# Tips

**Replacing a damaged laminate flooring plank with Safe-Lock® PRO**

In the event of a damaged laminate flooring plank in the middle of a room, it is possible for you to replace this with some handicraft skill. To do so, cut right through the damaged plank with a saw (Figure 1) and remove the damaged plank. Use the plank height of your installed laminate flooring as a guide. Apply adhesive tape along the cut edge (Figure 2). To do so, please slightly lift the installed area and place a wide adhesive strip with the sticky side facing up half way under the installed area. Remove the parts of the click geometry highlighted in Figure 3 from a new, undamaged plank.

Now insert the adjusted piece of plank into the gap from above and press the planks firmly around the edges onto the adhesive tape. You can achieve additional stability by applying glue to the edge beforehand (Figure 4). Place a weight onto the replaced plank so that it lies flush with the adjacent planks. Place the weight beyond the plank area.

**Shortening a door frame**

Lay a leftover piece of plank incl. underlay with the decor side facing down against the frame and saw it off along the plank as shown (Figure 5). Please also take note of the instructions in the Assembling Trendtime 3 section.

**Pipe holes**

Make the diameter of the pipe holes 10 mm bigger than the pipe (play/movement joint). Mark the holes, drill out and saw off at an angle of 45° as shown in the illustration (Figure 6). Glue the sawn out piece in place. Do not forget the wall clearance here either.

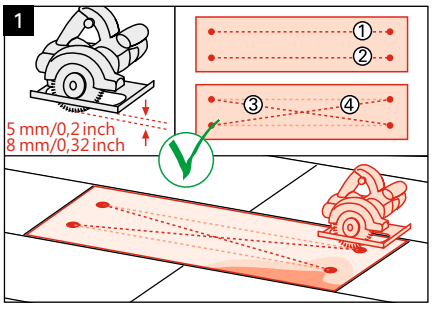


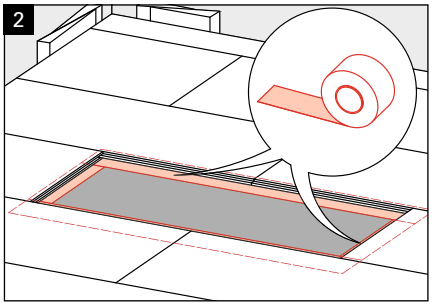


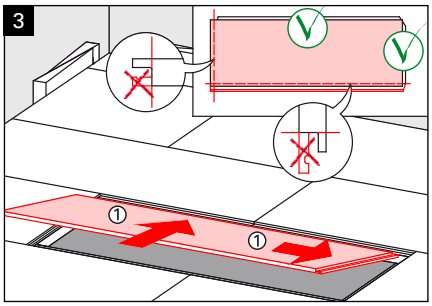


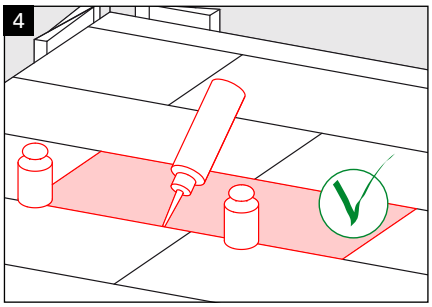


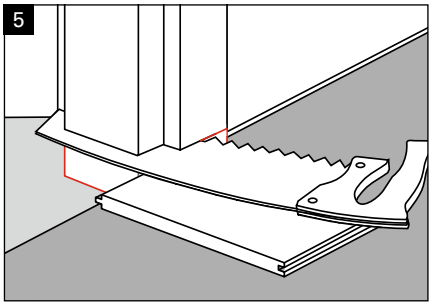


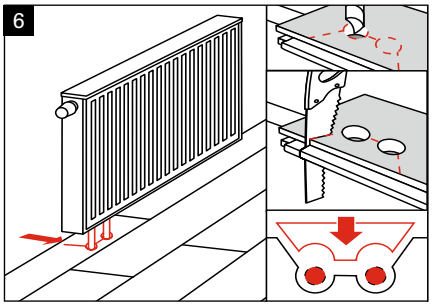

# Retaining value, cleaning and care

Parador laminate flooring is melamine resin-coated and extremely durable. In order to enjoy your new floor for a long time, here are a few tips for retaining value, cleaning, and care:

**Preventing damage**

As with all other floor coverings, you should protect your new laminate flooring from dirt particles by using suitable dirt-trapping zones (mats) (Figure 1).

To protect the laminate floors from scratches, suitable soft felt pads must always be fitted under chair and table legs and under pieces of furniture (Figure 2).

Rollers on office chairs, file trolleys and roller containers should be fitted with soft treads / rollers (type W in accordance with EN 12529) (Figure 3). There is also the option of protecting the floor in these heavily used areas with suitable mats (available in office supply stores). It is not necessary to wax the laminate flooring or give it an additional seal, as such measures can in no way improve the floor's looks or benefits of use.

We recommend that you clean your laminate flooring regularly with a vacuum cleaner (attached brushes) or broom. Cleaning with a slightly damp cloth should only be done in case of stubborn dirt. It is important in this case that the cloth is well wrung out and that no puddles form with standing water.

**Retaining value**

General information on retaining the value of your laminate flooring:

› 35-60 % relative humidity is ideal for Parador laminate flooring and also recommended for people's well-being.
› Avoid sand and dirt as both act like sandpaper.
› Immediately wipe up liquids resting on the floor.
› Only wipe with a slightly damp cloth.
› Do not use any abrasives, floor wax, steam cleaners or polishes. Among other things, they tarnish the floor's appearance.
› Fit chairs and tables with soft felt pads. Office chairs should have soft rollers, otherwise use suitable floor mats in these heavily used areas.
› Do not use steam cleaners.
› More detailed information can be found in the document "Cleaning accessories - overview of products and applications".

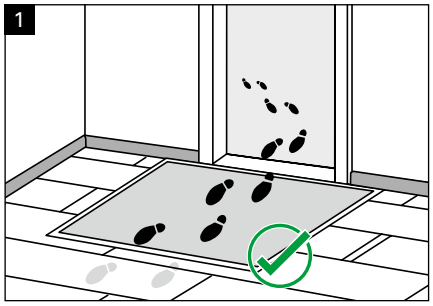


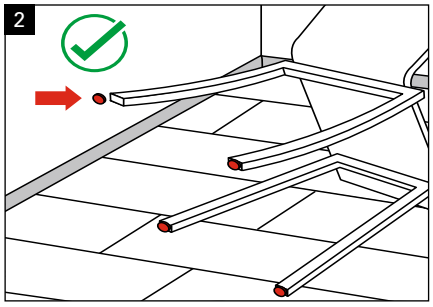


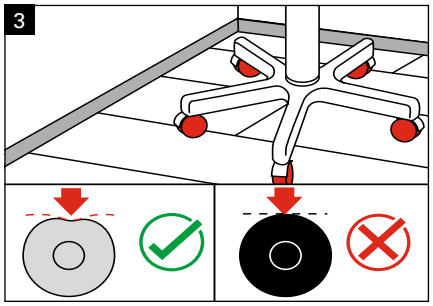


Video link - Retaining the value of Parador floor coverings:

Note:
Click on the text "Video link", on the QR code or scan the QR code

# Retaining value, cleaning and care

**Final construction cleaning**

Remove drilling dust and loose particles with a broom or vacuum cleaner. Remove glue streaks and residues with Parador floor cleaner. To do so, apply some glue remover to a cloth and clean the affected areas. To finish, wipe damp (wring cloth out well and avoid puddles of standing water).

**Routine cleaning**

Remove dust, fluff and loose particles with a broom or vacuum cleaner with attached bushes. Wipe off dirty marks with a damp cloth. In the case of stubborn dirt, treat the flooring with a damp cloth using cleaning agents from the Parador range. Make sure that no puddles of water form.

**Stubborn dirt**

Dirty marks caused by substances like shoe cream, varnish, tar, oil, grease, ink and lipstick are best removed using a cloth soaked in solvent. Acetone, nail varnish remover or white spirit, for example, are suitable for this purpose. In this respect, the safety guidelines should be observed and the products only used carefully in the affected area with a little solvent.

**Touching up minor scratches**

Use the Parador varnish retouching pen to touch up minor scratches. When doing so, pay attention to the application description. Repeat this process if necessary. To finish with, wipe with a damp cloth.

**Repairing more serious scratches and damaged areas**

The damaged areas can be repaired by filling with the repair paste from the Parador Premium repair set. When doing so, pay attention to the application description. Our Premium repair set also offers an optimal option for professional touching up.

Video link - Repairing Parador floor coverings:

Note:
Click on the text "Video link", on the QR code or scan the QR code

Cleaning accessories Overview of products & applications (PDF document)

Note:
Click on the text "PDF document", on the QR code or scan the QR code

# Frequently asked questions

**1. What is the reason for the planks warping and cupping?**

Warping and cupping occur if the laminate planks are not sufficiently acclimatised before being installed. Please remember to acclimatise the planks! In other words acclimatise the laminate flooring for at least 48 hrs before installation in sealed packaging on an even surface in the place of installation.

**2. What is the reason for open joints?**

The cause of open joints on laminate floors often lies with the humidity, which is (much) too low (material dries out). It is essential to maintain the required humidity here. During the heating period, a room humidity of at least 50-65% at a temperature of 20 to 22°C is ideal.

**3. What is the reason for the floor bulging upwards?**

If the floor bulges upwards, this usually means that the floor area is abutting the wall in some place, or the expansion joint is no longer adequate somewhere. (radiator pipe, door frame, floor profiles, etc.). Please check everywhere to see whether there is still room for movement. Even minimal contact is enough to make the floor bulge up in another place.

**4. What is the reason for the edges swelling?**

If floors are cleaned too often with too much moisture, or if liquids are left standing and not removed immediately, this often leads to swelling around the edges. This is because moisture penetrates the joints and makes the wood-based material swell. This can be prevented reducing the frequency of damp-mop cleaning and removing liquid (puddles) immediately.

**5. What is the reason for the laminate flooring looking "dull" and obscured?**

This problem often occurs due to using the wrong cleaning agent. These cleaning products form layers that build up on the floor like a film over time and hence dull its appearance. Refrain from applying cleaning products that form layers, therefore, such as polishes or floor wax.

**6. Laminate flooring in the bathroom?**

Laminate flooring from the Basic, Classic and Trendtime collections can be used in wet rooms and where there is standing water (Figure 8a). Laminate flooring from the Basic collection up to 24 hours, Classic and Trendtime up to 48 hours (Trendtime 3 up to 1 hour).
The Selected collection can be used in wet rooms with up to 72 hours of protection in standing water. Please observe the installation instructions.

# Checklist for installation on hot water underfloor heating

As a matter of principle, all mineral substrates must be heated before installing laminate flooring so that damaging moisture can no longer escape. This heating process applies to all times of the year, winter or summer.
The screed must be professionally laid according to the generally acknowledged rules of the trade (DIN). It must dry out for at least 21 days before the heating process can begin. We recommend heating the screed according to the following diagram or using the heating protocol template. Please observe additional information given by your screed layer and heating engineer.

Installation on underfloor heating (excerpt from section Installation options)

Parador laminate flooring is suitable for floating installation on hot water underfloor heating systems. Please note the following for installation on electric underfloor heating systems:
› installation only with systems that have temperature sensors and controllers
› no installation on older design electric underfloor heating systems (installed before 2000)
› no installation on night storage heaters

On the technical data sheets you will find further information, for example about the heat transmission resistances of our laminate floors. The maximum surface temperature of 29 °C must not be exceeded and a very fast heating process must be avoided.

# Heating diagram for a hot water underfloor heating system

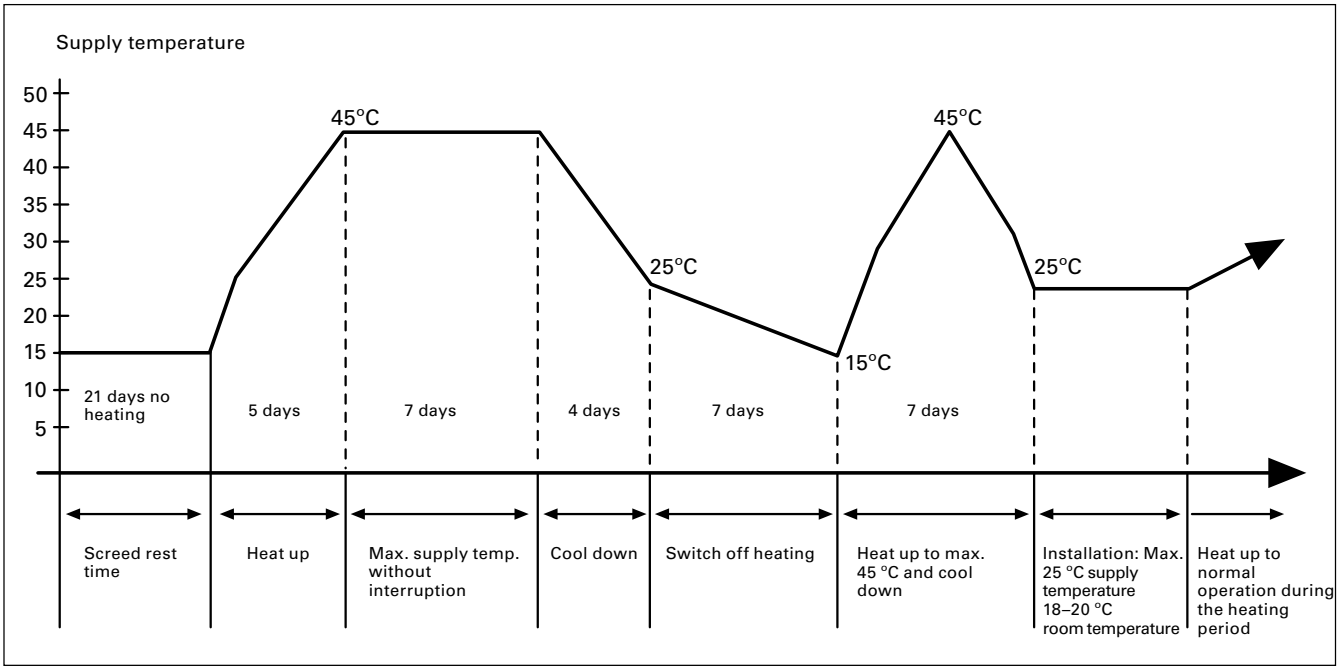


Please bear in mind: the surface temperature of the laminate flooring should ideally not exceed 25 °C (max. 29 °C).

# Heating protocol for hot water underfloor heating systems (template)

**It is essential to keep a heating protocol for newly installed hot water underfloor heating systems.**

1. a)The screed work was finished on _____.

   b) It is a cement ☐, anhydrite ☐ screed.

   c) The average thickness of the screed is_____ cm.

2. a) The heated floor construction was put into operation on_____.
   _____ and heated up to 45 °C with a daily temperature increase of 5 °C (supply temperature).

   b) This maximum temperature was maintained for _____ days (target: 7 days) without lowering the temperature at night.

   c) From_____ to_____ (target: 4 days), the supply temperature was reduced by 5 °C a day.

   c) From_____ to_____ (target: 7 days), the heater was shut off.

   e) The heater was started again on_____ and on_____ the supply temperature of 45 °C was reached.

   f) After reaching the supply temperature of 45 °C, the supply temperature was reduced in temperature steps of max. 10 °C a day (max. 25 °C) until the room temperature reached approx. 18 – 20 °C for the installation of laminate and engineered wood flooring.

3. During the heating and cooling off period, were the rooms ventilated but draughts prevented? ☐ yes

4. The last moisture measurements at the measuring points marked showed _____ % residual moisture. (Permitted values: anhydrite screed max. 0.3 CM %, cement screed max. 1.5 CM %)

5. The heated floor surface is hereby approved for the installation of wear layers/floor coverings.

For the builder/client:

_____

Place/date/signature/stamp

The notes are used to advise the installer/heating engineer and the builder. Warranty claims cannot be derived from this. In case of doubt, corresponding regulations stipulated by the screed layer/heating engineer must be followed.

Vinyl flooring | Modular ONE
Engineered wood flooring
Laminate flooring | ClickBoard
Panels | Mouldings and accessories

Parador GmbH
Millenkamp 7-8
48653 Coesfeld
Germany

Hotline +49 (0)2541 736 678
info@parador.de
parador.de/en

Status: 09/2024 © Parador
Subject to errors and alterations